V-60HD Block Diagram

April 2022

VIDEO

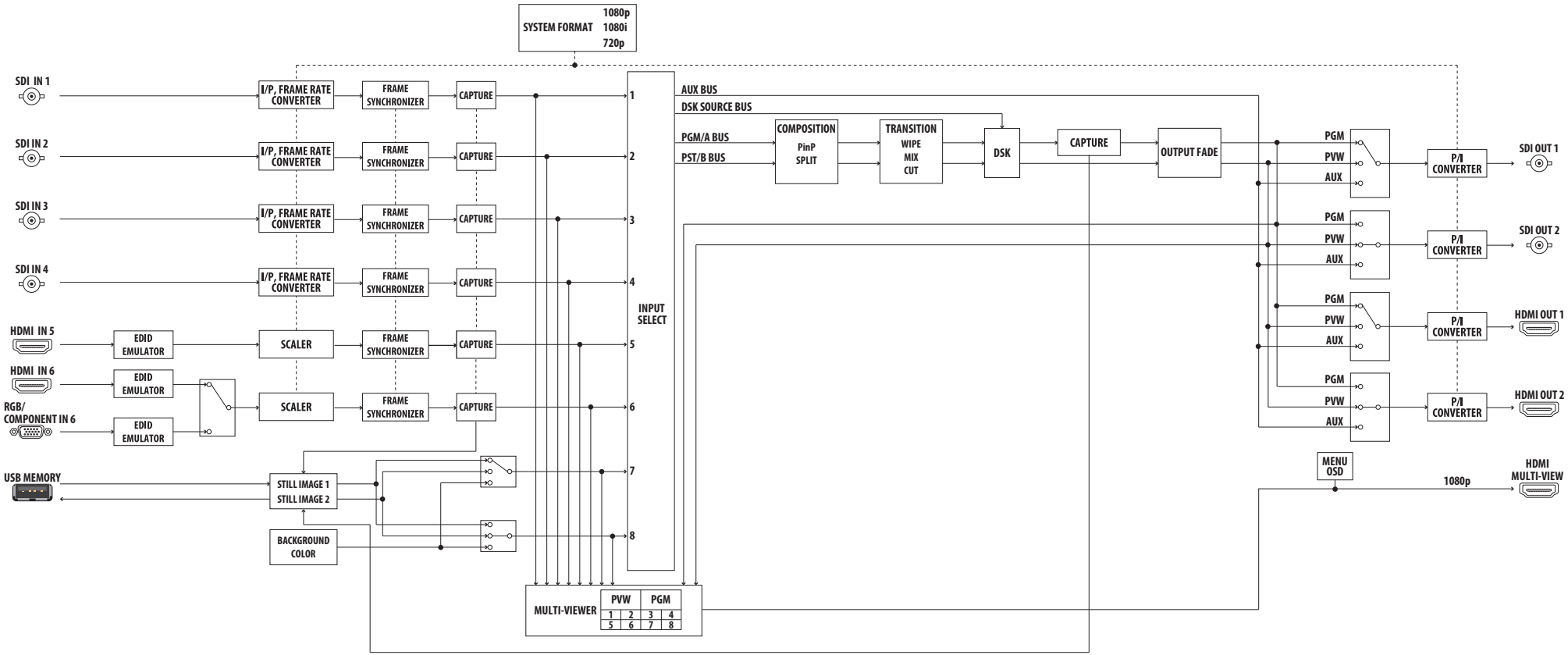

V-60HD Block Diagram

April 2022
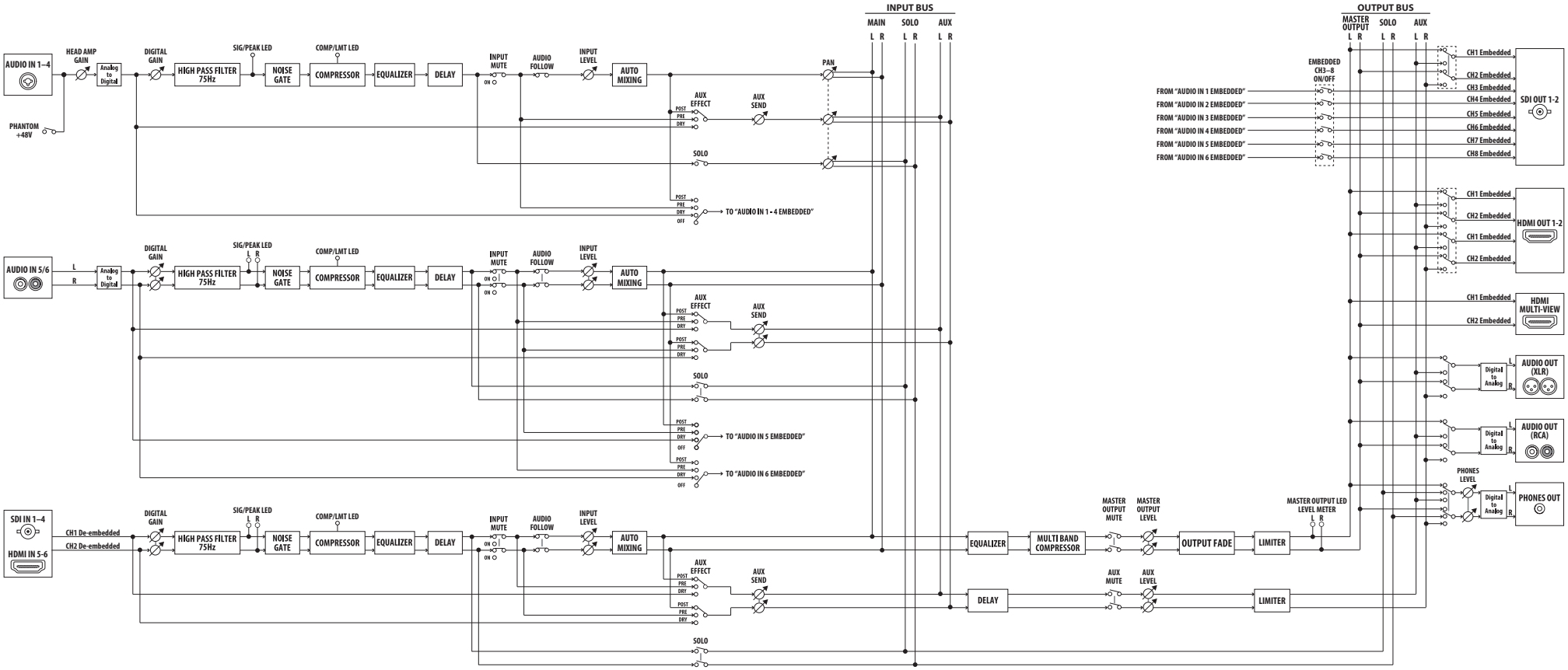
AUDIO